

POWER & DATA DISTRIBUTION / JUNCTION BOXES

MD96JCB WEATHERPROOF JUNCTION BOX

SKU: F096001

View Online ›

FEATURES

- **Weatherproof Junction Box suitable for demanding environments**
- **Terminations upgradable to 32-way**
- **2x M16 and 2x M25 IP68 Nylon Cable Glands (Stainless Steel Option)**
- **M6 Earth Stud**
- **Ideal for connection of Marine Data equipment with existing Ship's Cabling**
- **Finished in Window Grey (RAL7040) Semi-gloss Powder Coat**
- **Machined billet aluminium enclosure with 4x Stainless Steel Cover retaining bolts**
- **Corrosion and rust resistant enclosure with Nitrile cover gasket, temperature stability, High resistance to Chemical and Petroleum based Fuels**
- **Barrier Terminals with Nickel Plated Brass Screws and Terminal Plates**

OVERVIEW

The MD96JCB is a weatherproof, rugged Junction Box, machined from marine grade billet aluminium; designed to make the connection of Marine Data equipment to ship's cabling quick, secure and protected.

The internal screw Terminal Blocks are mounted inside the enclosure base or lid for easy access and termination. The junction box is supplied with 2x 8-way Terminal Blocks as standard, however, an optional Terminal Block Kit can be ordered to expand up to 32-way.

Supplied with 2x M25 and 2x M16 plastic Cable Glands to suit a range of cable sizes from 5 mm to 17 mm in diameter (Optional stainless steel glands and blanking plugs available). Cable ports are by two blanking plugs (one of each size). The MD96JCB is bulkhead or pedestal mounted and fitted with an external M6 Earth Stud.

The MD96JCB offers a versatile connection solution and is finished in Window Grey (RAL7040) Semi-gloss Powder Coat to complement other marine navigation equipment.

The MD96JCB Junction Box from Marine Data: flexible in application, easy to install, simple to maintain and durable.

APPLICATIONS

- Connection of Marine Data equipment to ship's cabling
- Connection of a Marine Data Remote Dimmer to Marine Data equipment

RELATED PRODUCTS

- MD01/PMD - Remote Dimmer Control
- MD69BR - Bearing Compass Repeater
- MD69/24 - Pelorus Pedestal Compass Bearing Repeater
- The complete range of Marine Data Repeaters & Indicators

SPECIFICATIONS

PHYSICAL	
Weight:	1.2 kg
Dimensions:	H 177 mm; W 122 mm; D 73mm
Mounting:	Bulkhead / Pedestal
Connections:	Barrier Terminals through watertight glands; 2x M25; 2x M16
Construction:	Machined Billet 6061-T6 Aluminium Enclosure
Finish:	Window Grey (RAL7040) Semi-gloss Powder Coat

ELECTRICAL	
Terminals:	15 A Screw Terminals (2x 8-way) Expandable to 32-way (4 x 8-way) Terminal Blocks

ENVIRONMENTAL	
IEC 60945 Equipment Category:	Exposed Area
Operating Temp:	-25°C to +55°C
Compass Safe Distance:	Standard: 20 cm Steering: 20 cm

APPROVALS	
Conforms with:	IEC 60945

ADDITIONAL	
Supplied:	Barrier Terminals, Cable Glands, Blanking Plugs, fixings and Enclosure Gasket (assembly required)
Option:	Extra 2x 8-Way Barrier Terminals & Fixings SKU: SS37255
Option:	Stainless Steel Gland Kit & Blanking Plugs SKU: SS37254

All dimensions in mm

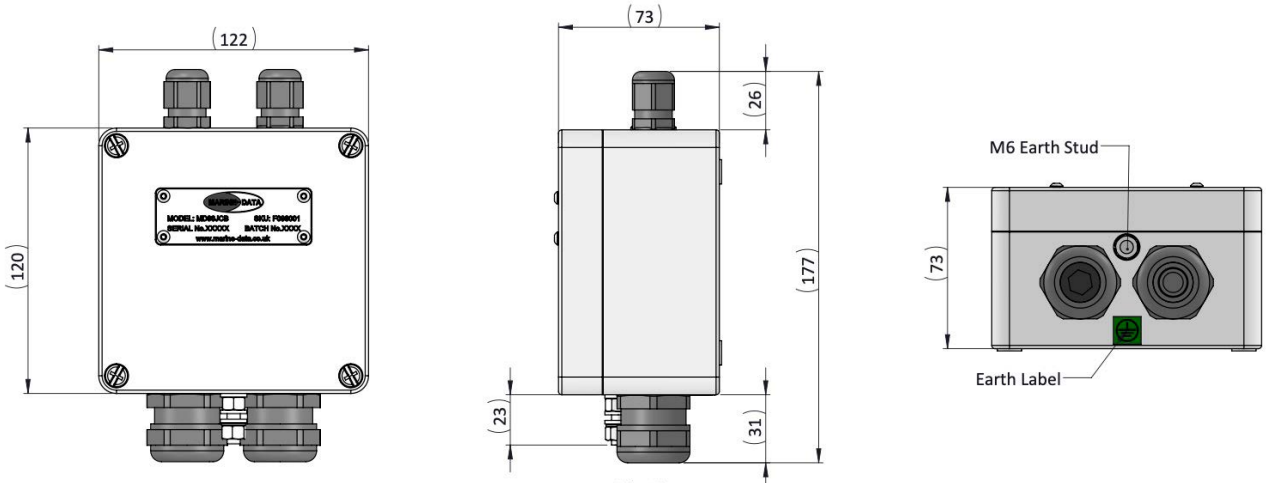

The MD96JCB is expandable to 32-way. Additional (optional) Terminal Blocks may be secured in the arrangement example below:

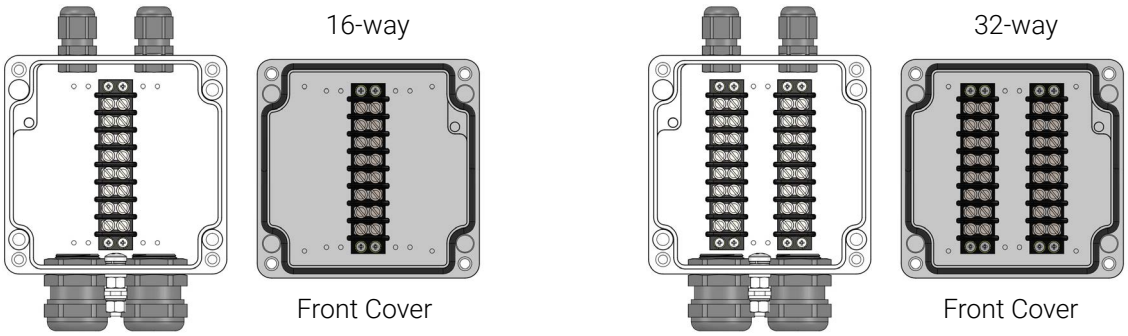

Copyright © 2026 Marine Data Systems Ltd. - MD96JCB Datasheet v06r02
Vittlefields Technology Centre, Forest Road, Newport, Isle of Wight, United Kingdom. PO304LY
Marine Data Systems Ltd. reserves the right to make changes to its products and specifications without prior notice.